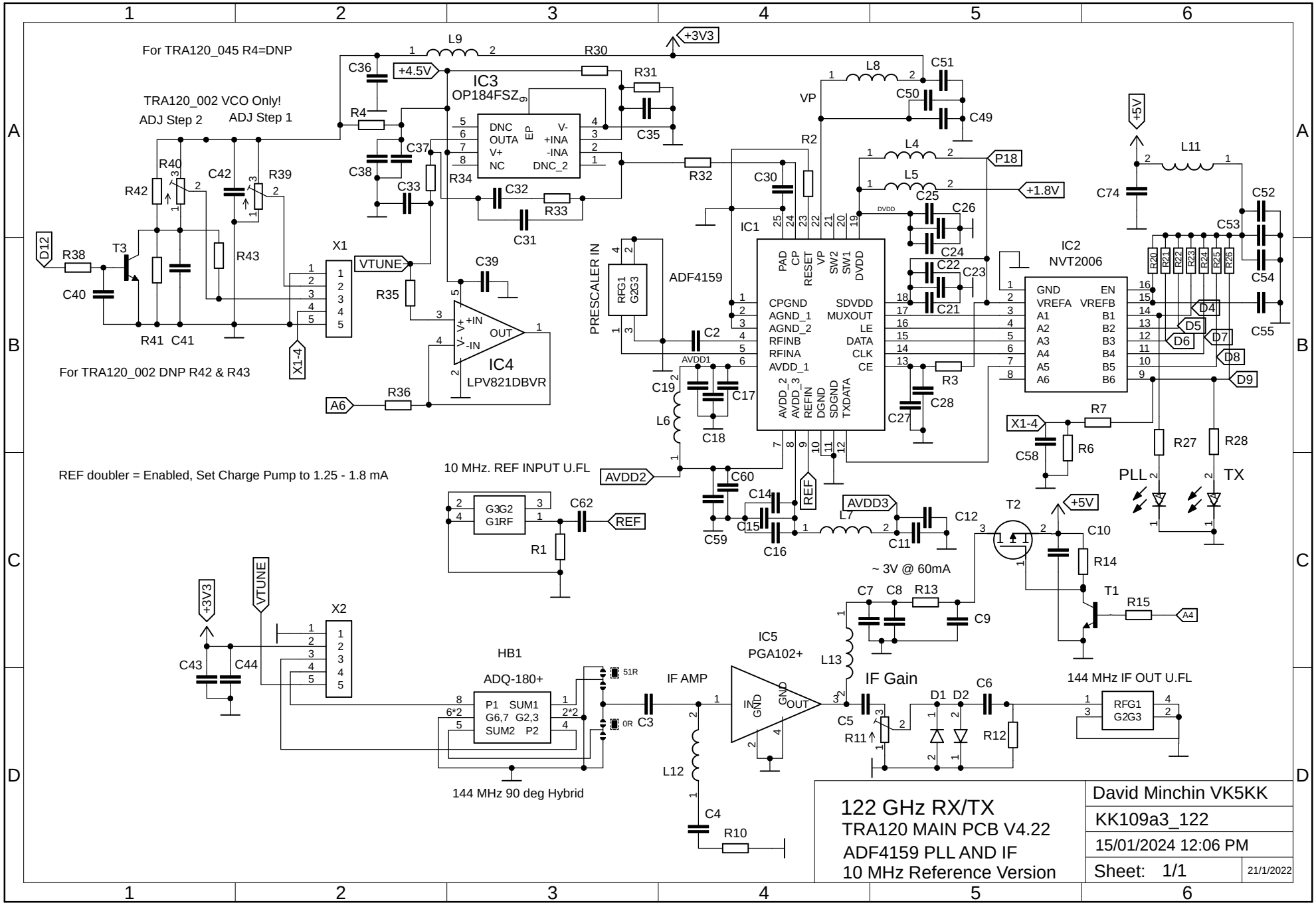
For TRA120_045 R4=DNP
TRA120_002 VCO Only!
ADJ Step 2
ADJ Step 1
For TRA120_002 DNP R42 & R43
REF doubler = Enabled, Set Charge Pump to 1.25 - 1.8 mA
10 MHz. REF INPUT U.FL
IC3
OP184FSZ
IC4
LPV821DBVR
IC1
ADF4159
PRESCALER IN
IC2
NVT2006
IC5
PGA102+
HB1
ADQ-180+
144 MHz 90 deg Hybrid
IF AMP
IF Gain
~ 3V @ 60mA
144 MHz IF OUT U.FL
PLL
TX
122 GHz RX/TX
TRA120 MAIN PCB V4.22
ADF4159 PLL AND IF
10 MHz Reference Version
David Minchin VK5KK
KK109a3_122
15/01/2024 12:06 PM
Sheet: 1/1
21/1/2022

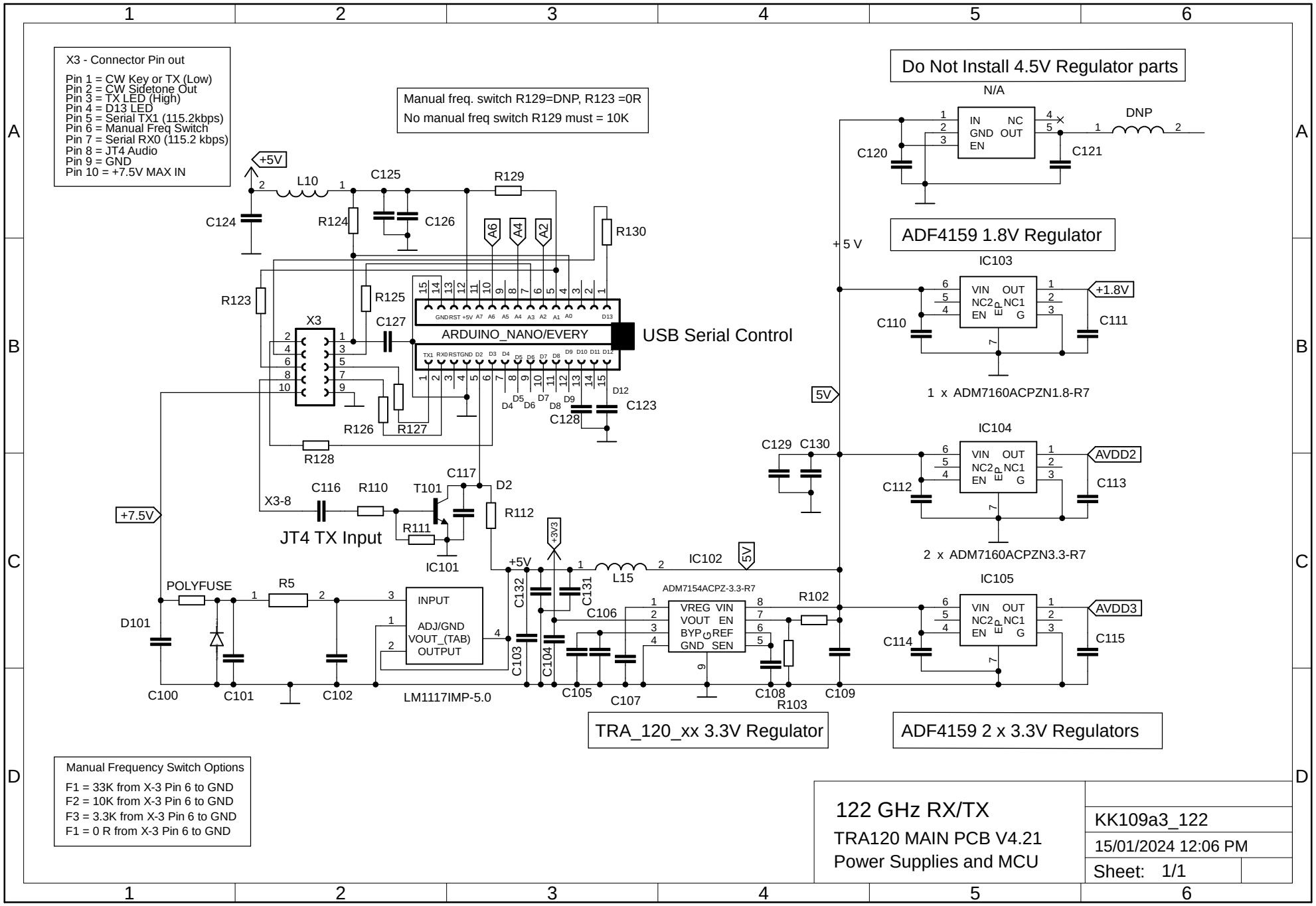
X3 - Connector Pin out
Pin 1 = CW Key or TX (Low)
Pin 2 = CW Sidetone Out
Pin 3 = TX LED (High)
Pin 4 = D13 LED
Pin 5 = Serial TX1 (115.2kbps)
Pin 6 = Manual Freq Switch
Pin 7 = Serial RX0 (115.2 kbps)
Pin 8 = JT4 Audio
Pin 9 = GND
Pin 10 = +7.5V MAX IN
Manual freq. switch R129=DNP, R123 =0R
No manual freq switch R129 must = 10K
Do Not Install 4.5V Regulator parts
N/A
IN NC
GND OUT
EN
DNP
C120
C121
ADF4159 1.8V Regulator
IC103
VIN OUT
NC2 NC1
EN G
+1.8V
C110
C111
1 x ADM7160ACPZN1.8-R7
IC104
AVDD2
C112
C113
2 x ADM7160ACPZN3.3-R7
IC105
AVDD3
C114
C115
+5V
L10
C125
R129
C124
R124
C126
A6
A4
A2
R130
R123
R125
X3
C127
ARDUINO_NANO/EVERY
USB Serial Control
GND RST +5V A7 A6 A5 A4 A3 A2 A1 A0 D13
TX1 RX0 RST GND D2 D3 D4 D5 D6 D7 D8 D9 D10 D11 D12
D12
C123
C128
R126
R127
R128
C117
D2
C116
R110
T101
X3-8
+7.5V
JT4 TX Input
R111
R112
IC101
+3V3
+5V
L15
IC102
5V
POLYFUSE
R5
INPUT
ADJ/GND
VOUT_(TAB)
OUTPUT
D101
C100
C101
C102
LM1117IMP-5.0
C132
C131
C103
C104
C106
ADM7154ACPZ-3.3-R7
VREG VIN
VOUT EN
BYP REF
GND SEN
R102
C105
C107
C108
R103
C109
TRA_120_xx 3.3V Regulator
ADF4159 2 x 3.3V Regulators
+ 5 V
C129
C130
Manual Frequency Switch Options
F1 = 33K from X-3 Pin 6 to GND
F2 = 10K from X-3 Pin 6 to GND
F3 = 3.3K from X-3 Pin 6 to GND
F1 = 0 R from X-3 Pin 6 to GND
122 GHz RX/TX
TRA120 MAIN PCB V4.21
Power Supplies and MCU
KK109a3_122
15/01/2024 12:06 PM
Sheet: 1/1