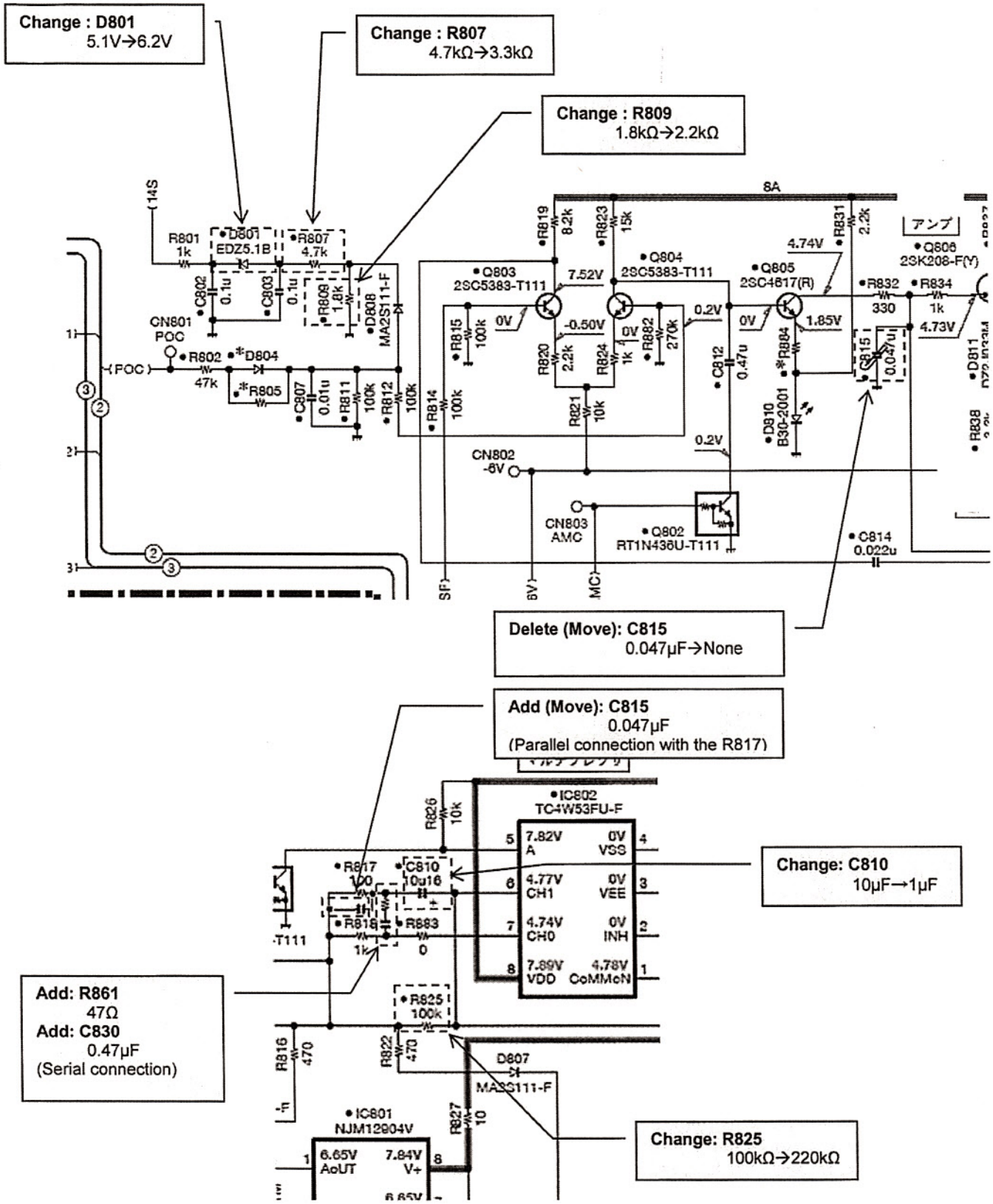TX-RX UNIT (X57-785x-xx, X57-861x-xx) Schematic diagram